LADDER PULL HANDLES

OFFSET LADDER PULL HANDLE BACK-TO-BACK

Cod.L4212X24SS-SET

Cutting guide

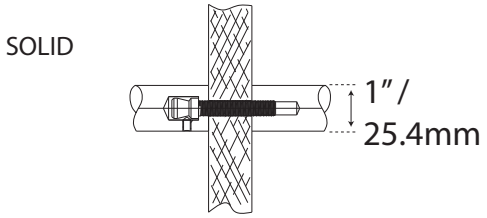

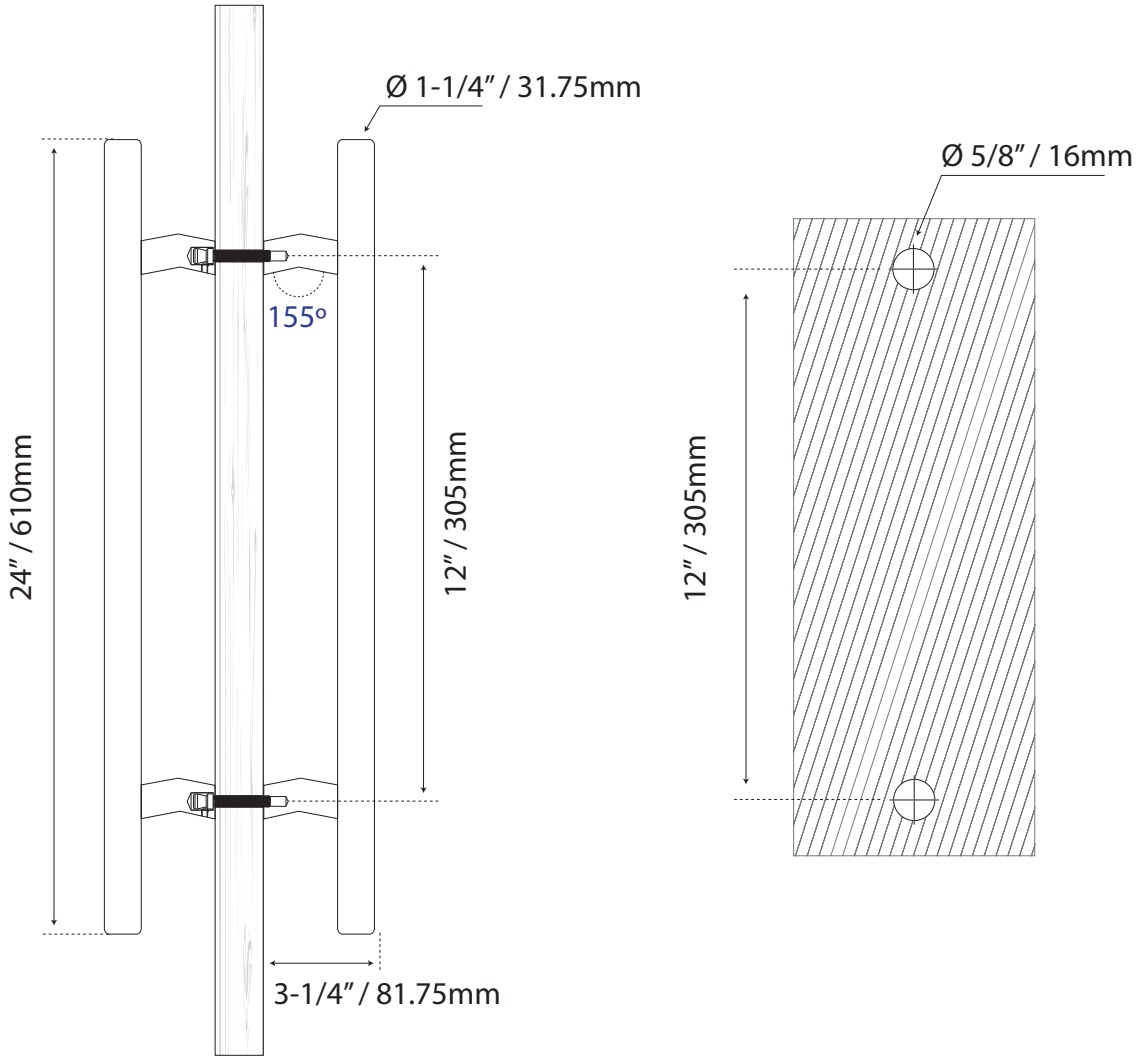

Unscaled format