LADDER PULL HANDLES

OFFSET LADDER PULL HANDLE BACK-TO-BACK
SATIN STAINLESS STEEL L27

COD. L2730X42

Cutting guide

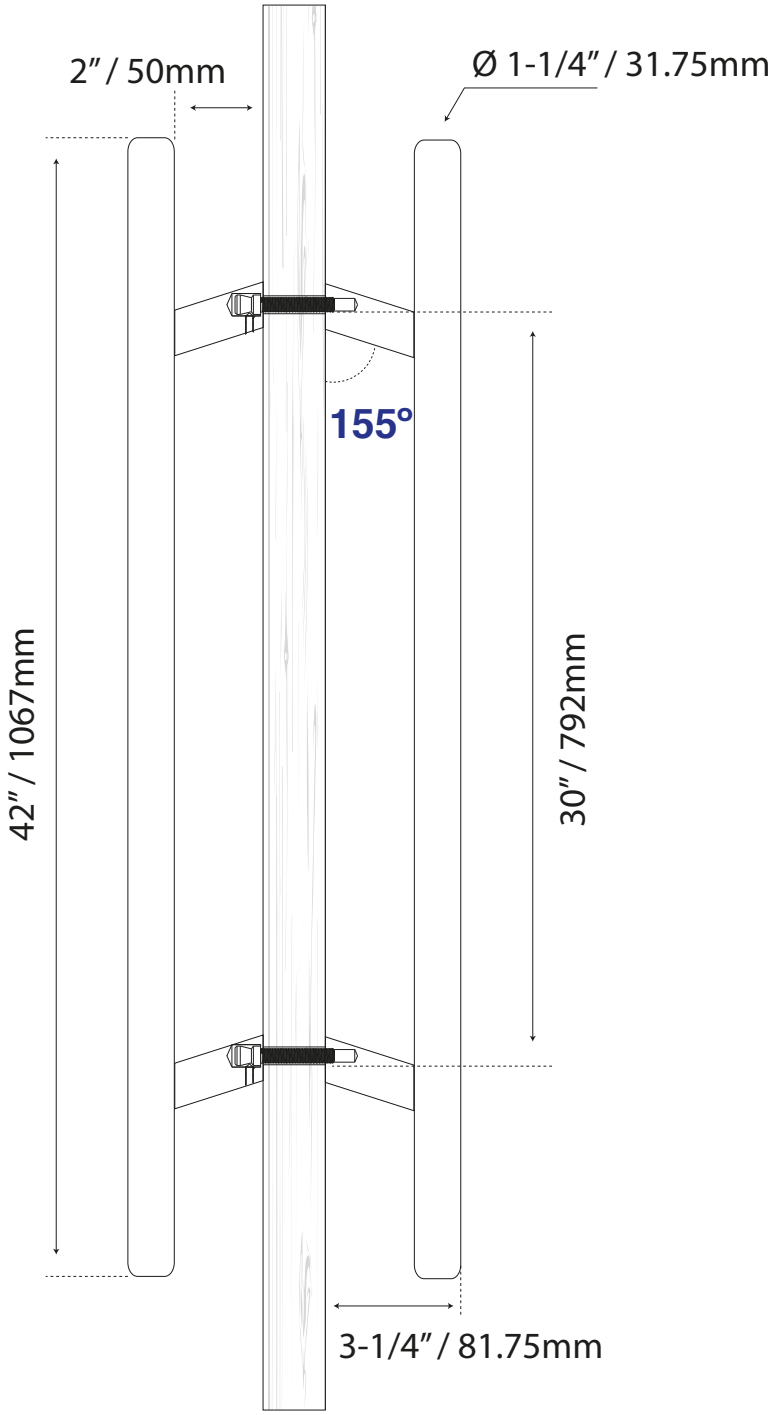

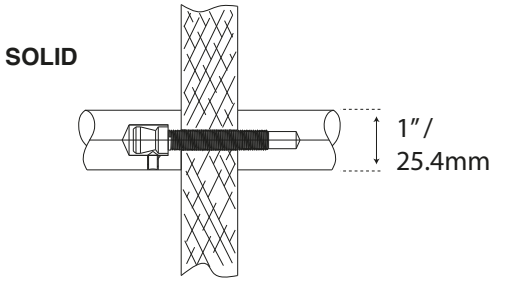

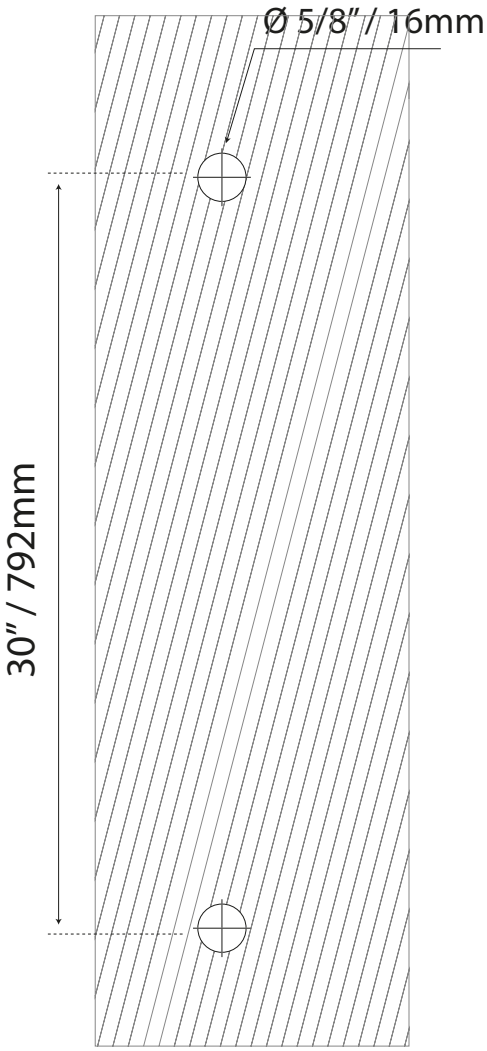

unscaled format