SLIDING DOOR SYSTEM

Installation Guide

CY-SOFTS06

Unscaled format

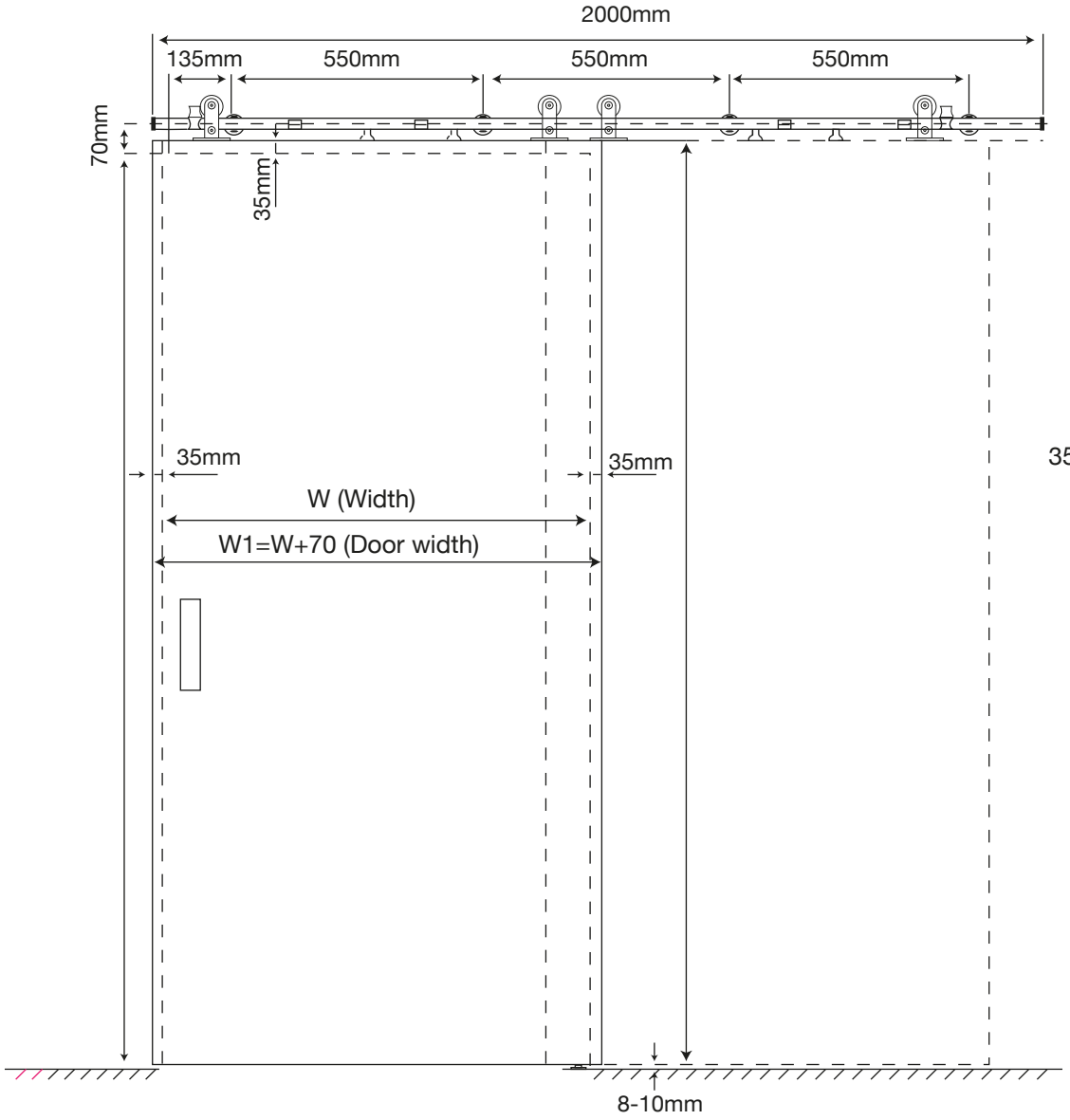

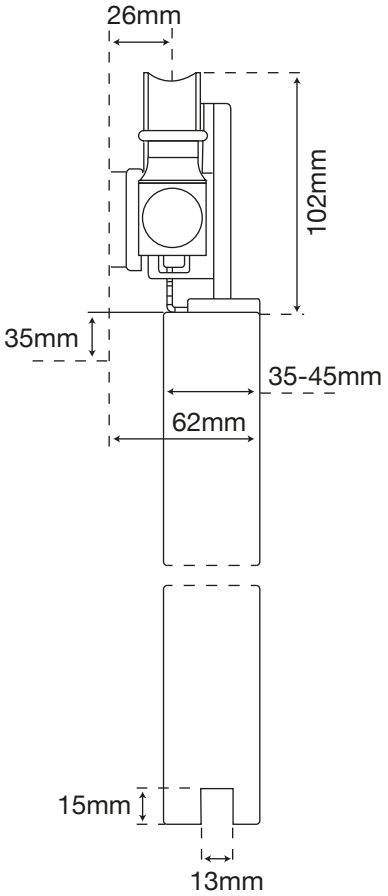

SLIDING DOOR SYSTEM

Installation Guide

CY-SOFTS06
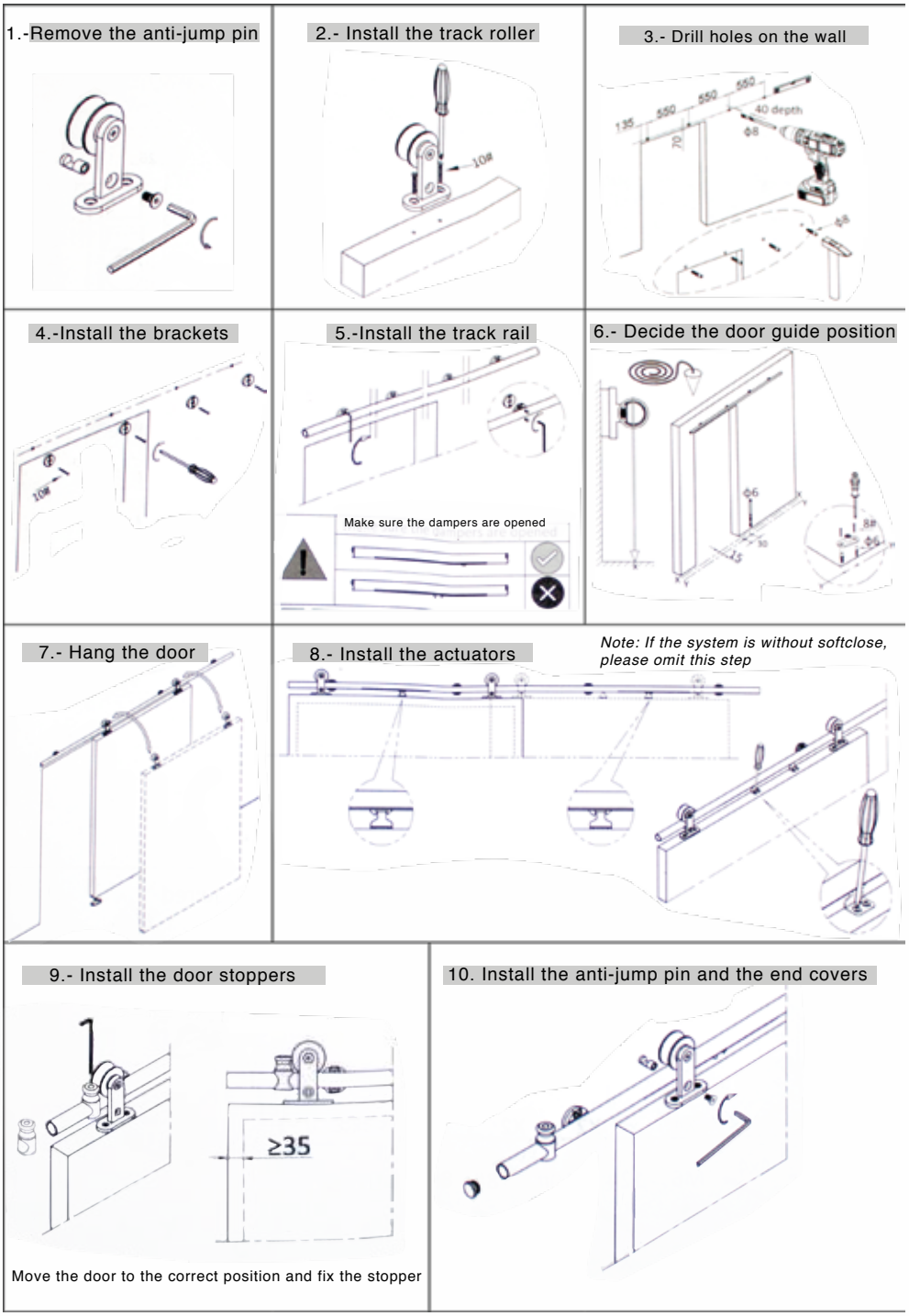
Unscaled format